CN-RJ-012G

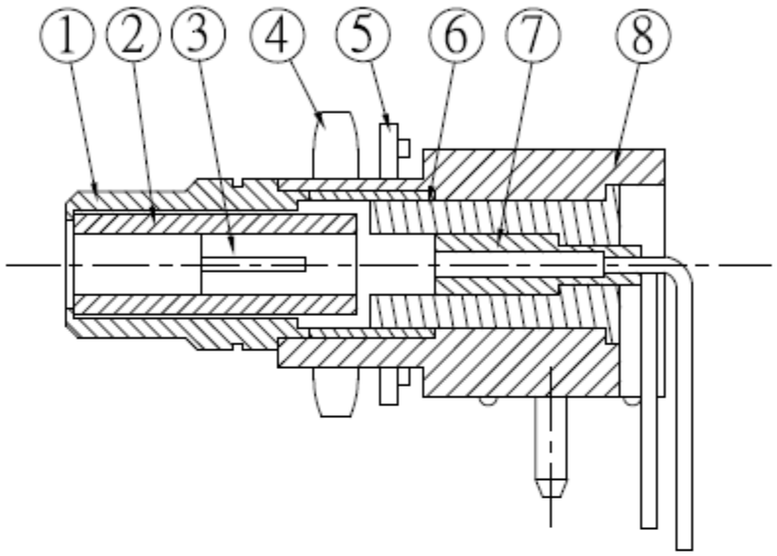

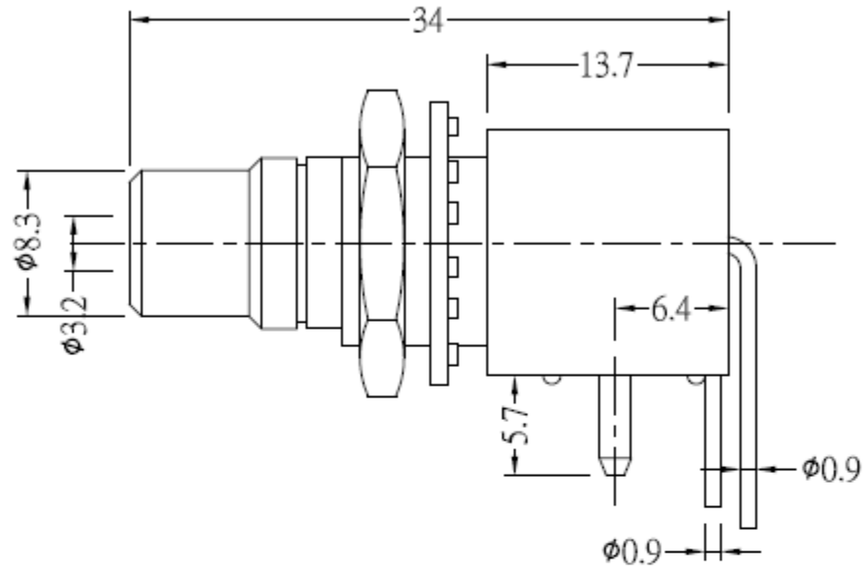

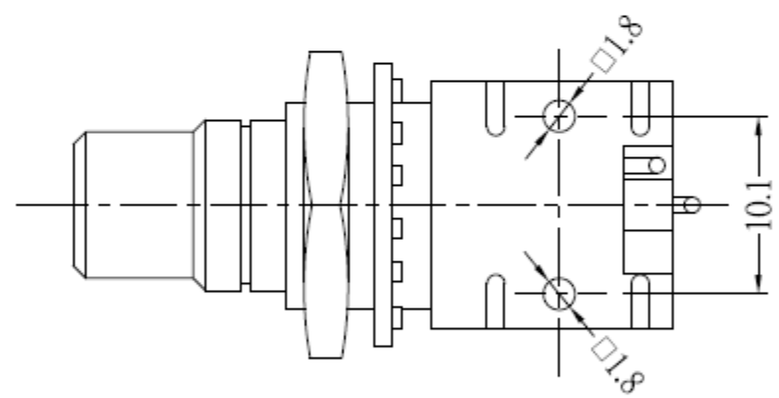

NO	Description	Materials	Finish/Color
①	铜头	BRASS	GOLD
②	塑胶管	TEFLON	
③	中心	BRASS	GOLD
④	螺母	BRASS	GOLD
⑤	内齿华司	IRON	GOLD
⑥	塑胶管	TEFLON	
⑦	中心	BRASS	GOLD
⑧	塑胶	PBT	

TITLE: RCA JACK PCB TYPE 90°

Unless Specified,otherwise tolerance are +/-0.1mm;Remark:ROHS Requirement Applied(符合ROHS)

NO	Description	Unit	Materials	Finish/Color	PART NO.
A.					
B.					
C.					
D.					
E.					
F.					

REV	DESCRIPTION	Issue	A	DATE:	2009/2/2
1				DATE:	
2				DATE:	
3				DATE:	
4				DATE:	

Approved	
Check	
Drawn	李杰
Unit	mm
Scale	2:1