CN-BJ-020G-N

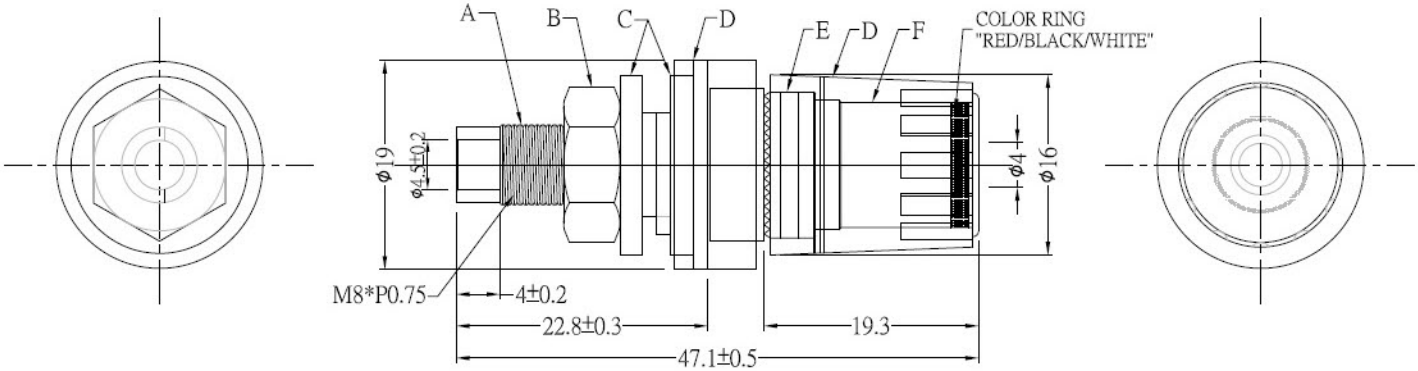

TITLE: BINDING POST

NO	Description	Unit	Materials	Finish/Color	PART NO.
A.	BODY	1	BRASS	GOLD	
B.	HEXAGON NUT	1	BRASS	GOLD	
C.	WASHER	2	PA66 NYLON	RED/BLACK/WHITE	
D.	SHELL	2	PMMA	TRANSPARENT	
E.	RING	1	BRASS	GOLD	
F.	SHELL	1	BRASS	GOLD	

REV	DESCRIPTION	Issue	A	DATE:	2010/6/14
1				DATE:	
2				DATE:	
3				DATE:	
4				DATE:	

Approved	
Check	
Drawn	李杰
Unit	mm
Scale	2:1